SPAL AUTOMOTIVE

SPAL Series Electric Fans

SPAL is recognized worldwide as a leader in automotive engine cooling technologies. We offer the complete line of SPAL fans to our customers to assure optimum cooling system performance.

The illustrations are for typical reference only. Your dealer will be happy to supply you with specific CFM recommendations and mounting information.

SPAL Series Electric Fans

Part Number	Fan Diameter	Motor Thickness	Fan Thickness	CFM
32141-SHF	14" Puller	3.390	1.100	1720
32140-SHF	14" Pusher	3.390	1.100	1720
32161-SHF	16" Puller	3.390	1.100	2360
32160-SHF	16" Pusher	3.390	1.100	2360
Extreme Duty 16"				
287016-VUR*	16" Puller	3.640	1.440	3000
32111-SDF* (See below)	11" Dual Puller (5 blade fan)	4.250	2.600	2780

Above fans do not include mounting brackets - Order 40137-VUB Bracket kit.

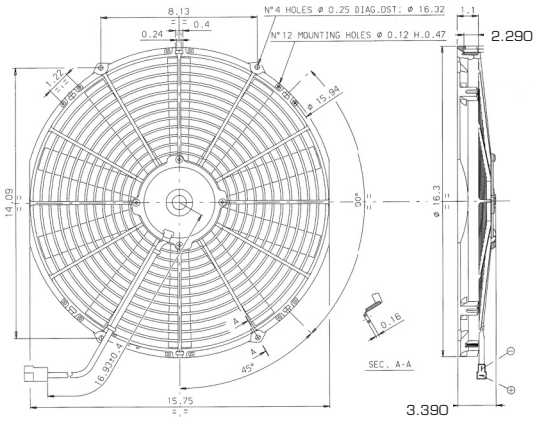

Notes:
1. These fans must use heavy duty wiring kit - see page 84
2. Other smaller fan models available by special order only. Allow 4-6 weeks delivery.

SPAL Dual Fans

Designed as a primary cooling fan package. They can be mounted horizontally for use on 50's, 60's and 70's cars and trucks. Mounted vertically, they can be used on mid to late 30's street rods and trucks.

32111-SDF.....11" Dual Puller

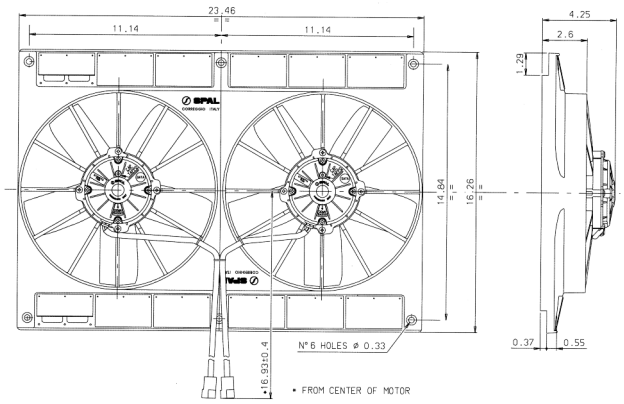

231360 - Dual Fan "Y" Connector to integrate **32111-SDF** Fans into our fan harness kits on page 80.

INDUSTRY RECOGNITION

1989 was a good year for Vintage Air. We continued to grow and create new products for the street rod market. The National Street Rod Association gave us their Industry Appreciation award in '89. We didn't ease up after that award and we won't coast after any others either.